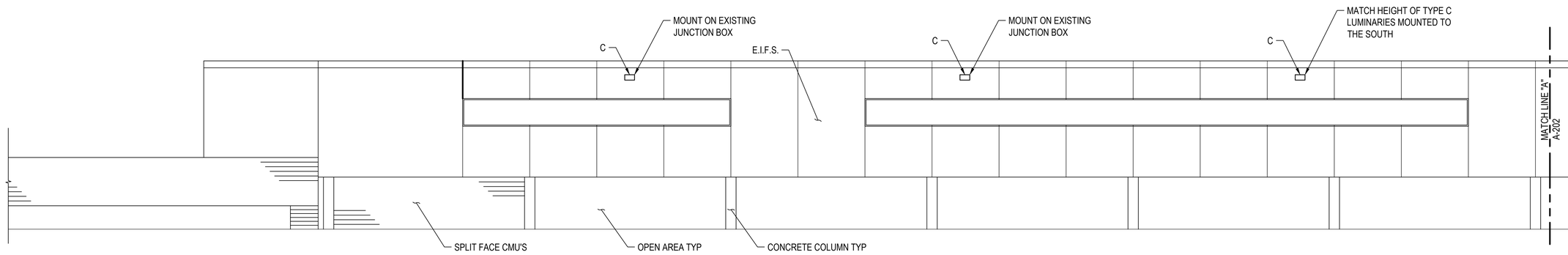

1 PARTIAL EAST ELEVATION
SCALE: 1/8" = 1'-0"
EL101

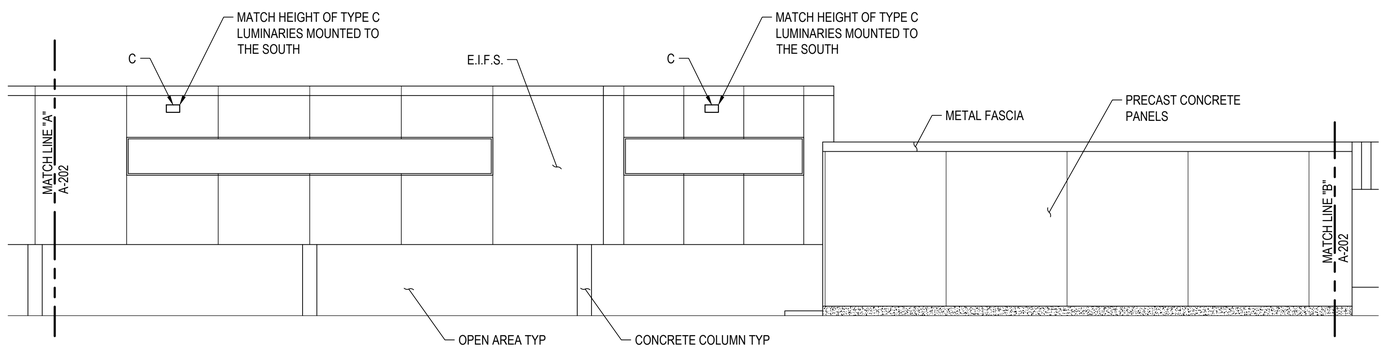

2 PARTIAL EAST ELEVATION
SCALE: 1/8" = 1'-0"
EL101

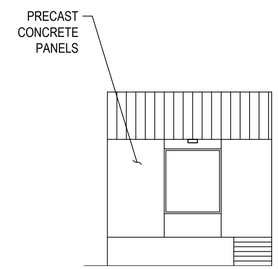

3 LOADING DOCK ELEVATION
SCALE: 1/8" = 1'-0"
EL101

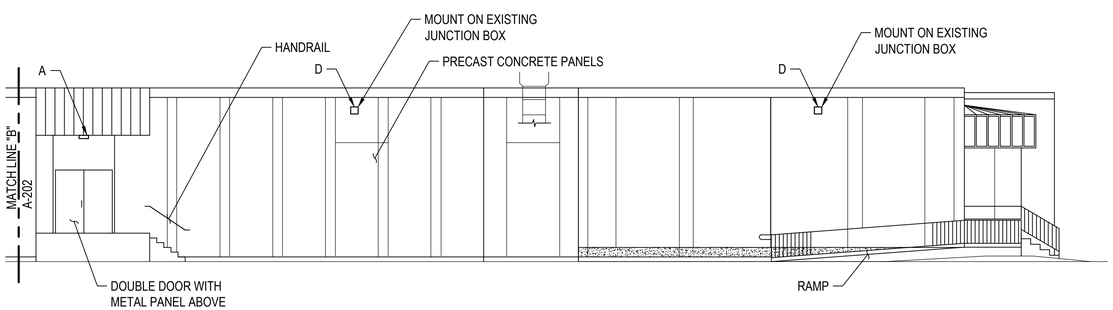

4 PARTIAL EAST ELEVATION
SCALE: 1/8" = 1'-0"
EL101

ENCORUS GROUP
encorus.com

STATE OF NEW YORK
THOMAS R. GILMARTIN
085647
LICENSED PROFESSIONAL ENGINEER
4/12/2019

Copyright 2019 - Encorus Group Engineering, P.C. all rights reserved. No part of this drawing may be reproduced or copied in any form by any means without the written permission of the engineer. Reproduction of this drawing for use in the production of shop and/or field detail drawings is expressly forbidden.

"Unauthorized alteration or addition to any plans, specifications or reports bearing a Licensed Professional Engineer's seal is a violation of Section 7209, subdivision 2, of the New York State Education Law".

CLIENT:
NYSIF
225 OAK STREET
BUFFALO, NY 14202

PROJECT:
225 OAK ST ENVELOPE REPAIRS
225 OAK STREET
BUFFALO, NY 14202

REVISIONS:

REV	DESCRIPTION	DATE	DFTR	CHKR
0	BID DOCUMENT	2019-04-12	DGA	SBV

PROJECT NUMBER:	18277
DRAFTER:	CJR
CHECKER:	JFF
ENGINEER:	TGR
DRAWING SCALE:	NTS
DRAWING SIZE:	ANSI D

DRAWING TITLE:
ELECTRICAL ELEVATION DETAILS

DRAWING NUMBER:
EL202