LEGEND:

- RECOAT EIFS WITH SPECIFIED MATERIAL
- RESEAL PRE-CAST WALL PANEL JOINTS SEE DETAIL 4/A-101

GENERAL NOTES

1. SEE GI-002 FOR NOTES AND LEGENDS.

KEYED NOTES

1. AT PRE-CAST CONCRETE WALL PANEL CRACK AREA, RAKE OUT ALL EXISTING PATCHING MATERIAL. REPLACE WITH COMPATIBLE CONCRETE PATCHING MATERIAL THAT MATCHES EXISTING COLOR AND TEXTURE. SUBMIT PROPOSED PATCHING MATERIAL TO ARCHITECT AND OWNER FOR APPROVAL. PROVIDE ONE- FOOT LONG MOCK-UP FOR APPROVAL.
2. AT ROUND DIVOT PATCH AREA, REPAIR IN ACCORDANCE WITH REPAIR TYPE 2 METHOD.

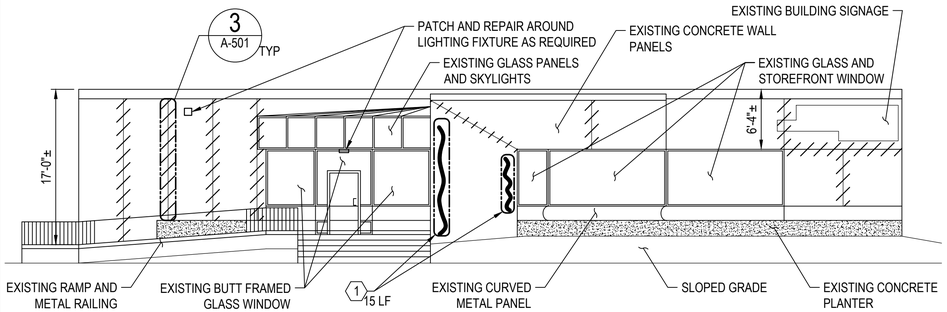

1 NORTH ELEVATION
SCALE: 1/8" = 1'-0"
A-101

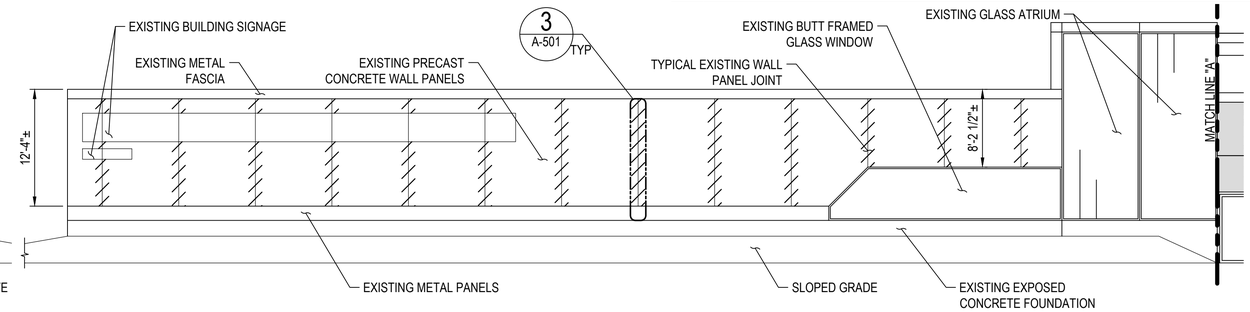

2 PARTIAL WEST ELEVATION
SCALE: 1/8" = 1'-0"
A-101

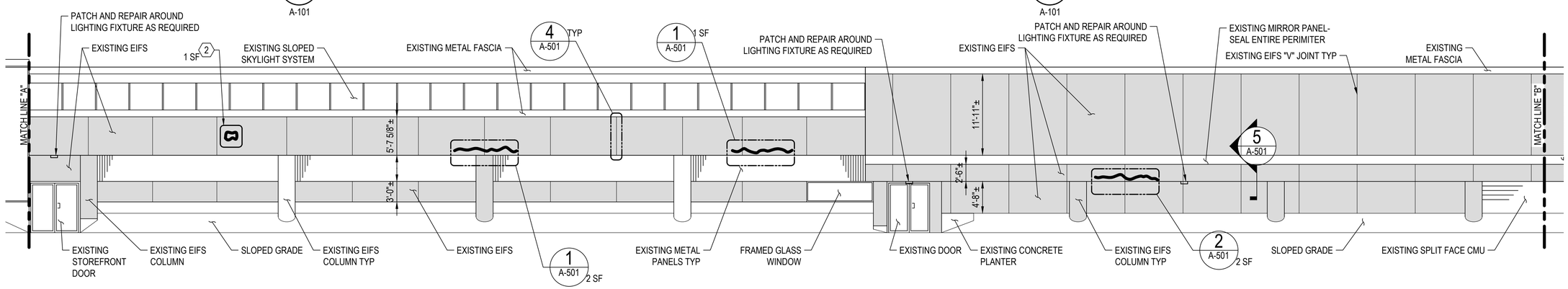

3 PARTIAL WEST ELEVATION
SCALE: 1/8" = 1'-0"
A-101

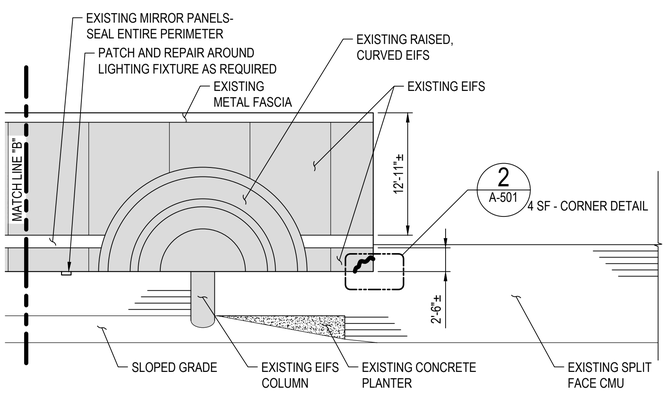

4 PARTIAL WEST ELEVATION
SCALE: 1/8" = 1'-0"
A-101

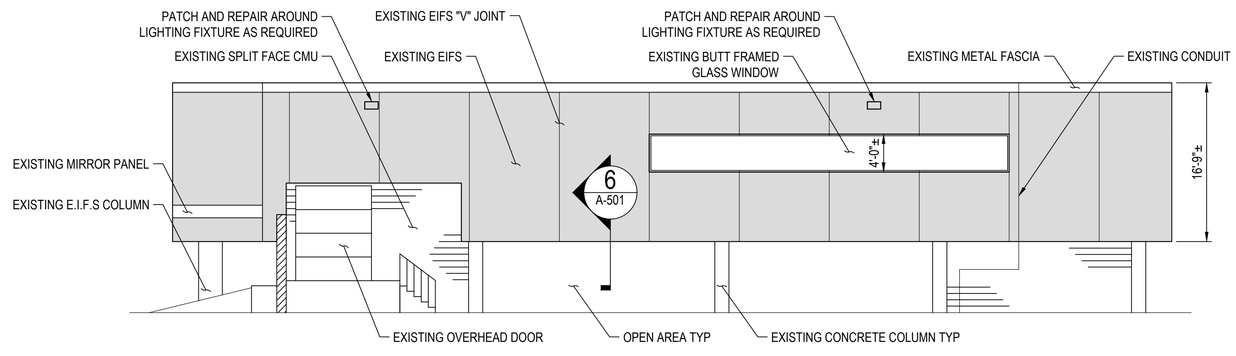

5 SOUTH ELEVATION
SCALE: 1/8" = 1'-0"
A-101

ENCORUS GROUP
encorus.com

REGISTERED ARCHITECT DANIEL JOSEPH SULLIVAN 022380 STATE OF NEW YORK
4/12/2019

Copyright 2019 - Encorus Group Engineering, P.C. all rights reserved. No part of this drawing may be reproduced or copied in any form by any means without the written permission of the engineer. Reproduction of this drawing for use in the production of shop and/or field detail drawings is expressly forbidden.

"Unauthorized alteration or addition to any plans, specifications or reports bearing a Licensed Professional Engineer's seal is a violation of Section 7209, subdivision 2, of the New York State Education Law".

CLIENT:
NYSIF
225 OAK STREET
BUFFALO, NY 14202

PROJECT:
225 OAK ST ENVELOPE REPAIRS
225 OAK STREET
BUFFALO, NY 14202

REVISIONS:

REV	DESCRIPTION	DATE	DFTR	CHKR
0	BID DOCUMENT	2019-04-12	DGA	SBV

PROJECT NUMBER:	18277
DRAFTER:	CGR
CHECKER:	SBV
ENGINEER:	DS
DRAWING SCALE:	NTS
DRAWING SIZE:	ANSI D

DRAWING TITLE:
ARCHITECTURAL BUILDING ELEVATIONS

DRAWING NUMBER:
A-201